S-2186 House connection valve

With integrated Esco-sit compression fittings

Application and features

- Application: Water and sea water
- No external bolts
- o-rings for stem sealing
- Blow-out proof o-ring for bonnet connection
- Stem of acid proof steel
- Low operation torque
- Lockable, bayonet connection to valve stem for S-1850

Technical description

- Pressure class: PN 16
- Max. working temperature: 70°, depended on pipe specifications
  For drinking water 20°C
- Test pressure: Open valve, 24 bar. Closed valve, 17,6 bar
- Connection: With Esco-Sit compression fittings
- Vacuum: -0,8 bar
- Approvals: SINTEF Byggforsk (N), SITAC (S), ETA(DK)
- Tested and approved for sea water:
  Det Norske Veritas Industry AS, report no.: R794135/R795019

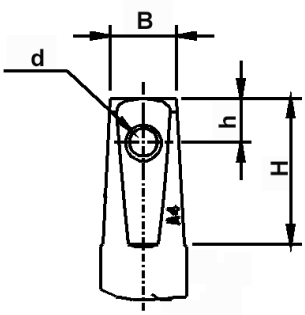

Dimensions stem top:

DN	B	H	h	d
20-50	12	18	8,1	5

References, dimensions and performances

DN/D mm	Dy mm	H mm	L mm	L1 mm	L2 mm	Weight kg	Kv m3/h	Z
20	25	169	110	33	128	1,6	43	0,2
25	32	169	118	37	142	1,7	69	0,2
32	40	169	130	38	156	1,8	69	0,2
40	50	183	140	45	168	2,3	80	0,2
50	63	208	150	50	180	4,0	221	0,2

DN/D mm	Esco no.
20	21860025
25	21860032
32	21860040
40	21860050
50	21860063

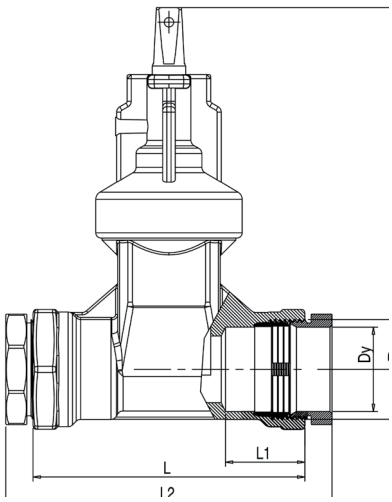

Kongsberg Esco AS can accept no responsibility for possible errors in catalogues, brochures and other printed material. Kongsberg Esco AS reserves the right to alter its products without notice. This also applies to products already on order provided that such alterations can be made without subsequental changes being necessary in spesifications already agreed. All trademarks in this material are property of the respective companies. Kongsberg Esco and the Kongsberg Esco logotype are trademarks of Kongsberg Esco AS. All rights reserved.

Kongsberg Esco AS
Gamle Gomsrud vei 40
PO Box 85
N-3602 Kongsberg

Telephone: +47 926 45 700
Fax: +47 32 73 29 99
E-mail: post@esco.no
www.esco.no

Reg. of Business Enterprises:
NO 911 511 207 MVA
NS-EN ISO 9001 approved
NS-EN ISO 14001 approved

S-2186 House connection valve

With integrated Esco-sit compression fittings

Material specifications

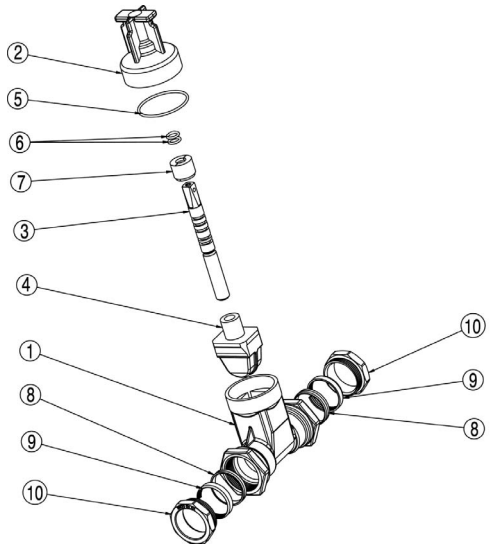

Pos	Detail	Materials
1	Body	Dezinkfree brass (DZR)
2	Bonnet	Dezinkfree brass (DZR)
3	Stem	Acid proof steel
4	Wedge	Dezinkfree brass (DZR)
5	O-ring	Rubber (NBR)
6	O-ring	Rubber (NBR)
7	Stem bushing	Dezinkfree brass (DZR)
8	Gasket	Rubber/dezinkfree brass (DZR)
9	Locking ring	Dezinkfree brass (DZR)
10	Lock nut	Dezinkfree brass (DZR)

Characteristics

Operation torque:

DN/Dy	Number of turns	Bore dia	Closing torque	Max.torque
20/25	7	22	20Nm	120 Nm
25/32	8	28	20Nm	120 Nm
32/40	8	28	20Nm	120 Nm
40/50	10	38	25Nm	120 Nm
50/63	13	50	30Nm	120 Nm

Installation

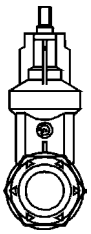

Recommended

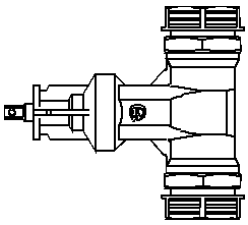

Possible

Possible

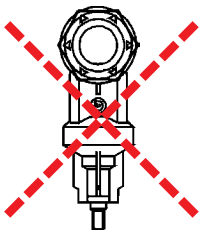

Not recommended

Accessories and other variations

Accessories:
S-2110 Handwheel
S-1850 Spindle extension
S-1830/S-1835/S-1840 Operating box

Other variations:
S-2140 With push-in socket for PE-pipes
S-2150 With PRK thrust screw couplings
S-2151 With standard pipe threads
S-2160 With PRK thrust screw coupling and male threads
S-2170 With PE-pipes

Kongsberg Esco AS
Gamle Gomsrud vei 40
PO Box 85
N-3602 Kongsberg

Telephone: +47 926 45 700
Fax: +47 32 73 29 99
E-mail: post@esco.no
www.esco.no

Reg. of Business Enterprises:
NO 911 511 207 MVA
NS-EN ISO 9001 approved
NS-EN ISO 14001 approved